ASEC INSTALATION GUIDE

Tools Required

- Power Drill
- 25mm, 15mm & 8m drill bits
- Philips screwdriver
- Hammer / mallet
- Chisel 25mm
- Stanley knife
- Adhesive tape, pencil, bradawl, tape measure

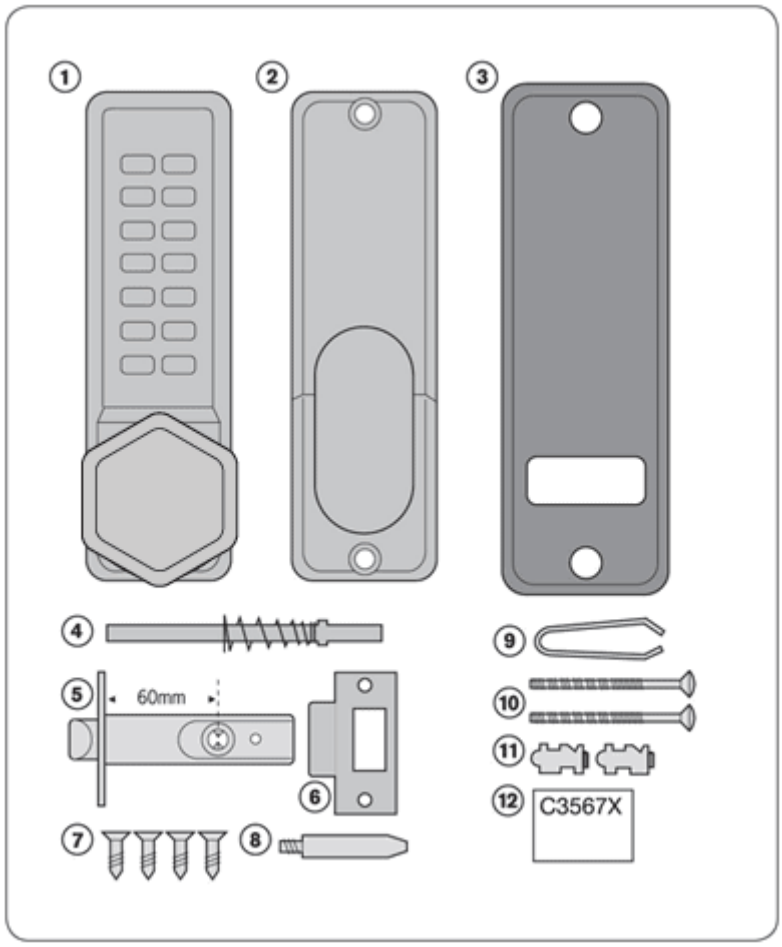

Special Notes
You are advised to familiarise yourself with the instructions before starting work.

- The hold open model is equipped with a snib on the backplate. This enables the latchbolt to be held open when required.
- Before commencing installation check that all parts are working correctly – press the code according to the code card and then the knob should turn and return easily under spring pressure. If you have a key override lock try

the keys to ensure that they turn in the knob handle.

- If you intend to change the code, you should do it, if it is convenient, before installing the lock – see the code change instructions.
- Make sure that the lever handle of the backplate moves freely. If your lock is a hold open model then check that the snib will engage and hold the handle in the latch open position.
- Check that the latch bolt moves freely by pressing at the end and also by turning the flat spindle in the latch cam

1. Check the hand of your door

Your door is right handed if, viewed from outside, the hinges are on the right.

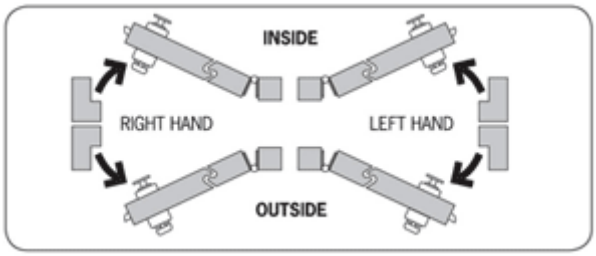

2. Apply the template

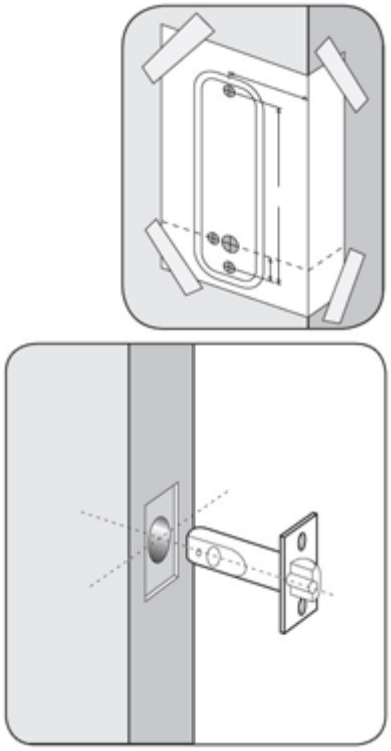

- Crease the template along the door edge line and tape it to the door.
- Mark the 13mm holes, and the 3 x 8mm holes. Mark the centre line of latch in the middle of the door edge. Now apply the template to the other side of the door, aligning it with your first mark in the middle of the door edge. Mark the 4 holes again.
- Keeping the drill level and square to the door, drill the holes from both sides to avoid splintering out the door face.

Positioning and fixing the deadbolt

- Mark a central point on the centre line of latch on the door edge.
- Mark the depth of 85mm on the drill bit with tape to act as a visible depth limit. Drill a 25mm hole, 85mm deep, keeping the drill level and square to the door.
- Insert the latch into the hole, and with the edges parallel to the door, draw around the face plate.
- Remove the latch. Score the pencil line with a Stanley knife to avoid splintering prior to chiselling. Chisel a 3mm rebate to fit the latch face flush to the door edge.
- Fix the latch with the wood screws, with the bevel towards the door frame.

3. Latch support post

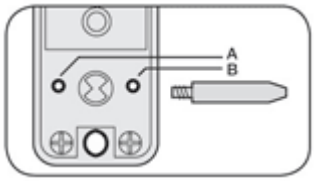

- Fit the latch support post in the back of the lockcase in hole A for a right hand door, or B for a left hand door.

4. Disable Hold Open Function

If required the hold open feature can be disabled as follows: Remove fixing plate by removing the four fixing screws and blue handing screw.

1. Lift out the snib block.
2. Flip over and reseat. Refit the fixing plate.

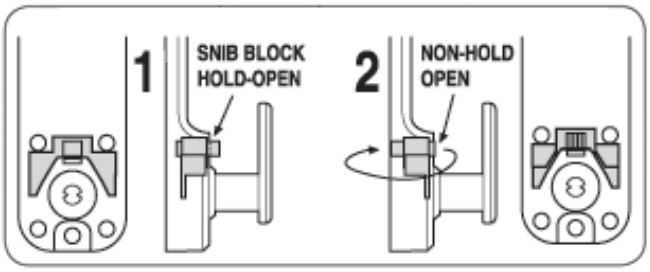

Do not fit the blue handing screw.

5. Positioning the spindle

- The spring loaded spindle will fit oors between 35mm and 65mm thick. For doors less than 50mm thick break off the 15mm section at the end of the spindle. For door more than 65mm thick, ring the helpline for advice. The spring keeps the spindle firmly engaged in the outside handle when the lock is assembled on the door.
- Insert the spindle, with the spring on the code side, through the 13mm hole in the door, and make sure that it engages the latch correctly for the hand of the door (see insert diagram).

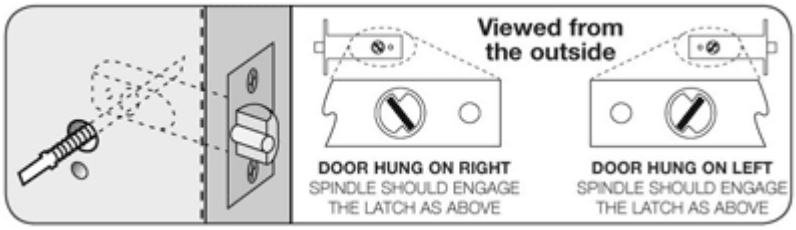

6. Fixing the lock

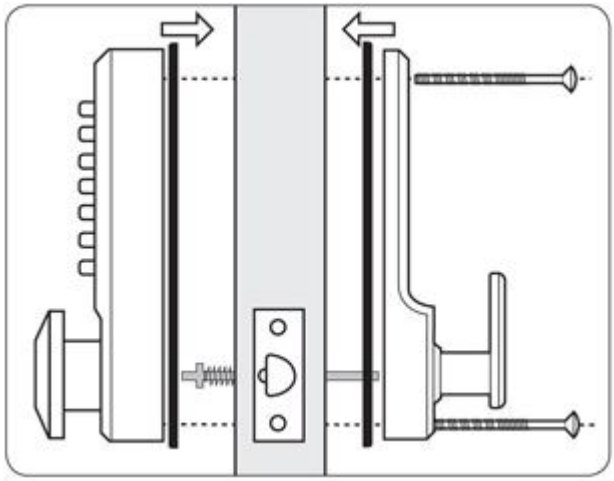

- Cut the fixing bolt to suit the door thickness, allowing at least one threaded section to screw into the lockcase.
- Hold the lock case and the backplate, with the seals, onto the door with the spindle in position.
- Using the fixing bolts screw everything together through the top and bottom holes of the backplate. Before final tightening make sure that the lock is vertical, and test the mechanism to ensure that it is all moving easily. Do not close the door until you are sure that the code works.
- Do not over-tighten the fixing bolts as this may cause distortion and lead to poor operation.

7. Fixing the strike plate

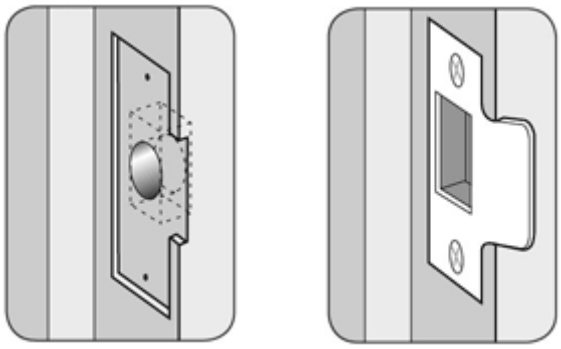

- Ensure that there are no obstructions to prevent the door closing properly into its frame, such as litter trapped in the hinge side.
- Position the strike plate on the door frame so that it lines up with the flat of the latchbolt, not the plunger.
- Draw around the aperture of the strike plate. Chisel out the aperture 15mm deep to receive the latchbolt. Fix the strike plate to the

N.B. The plunger beside the latchbolt deadlocks the latchbolt and protects it against manipulation. It must not enter the strike plate aperture when the door is closed.

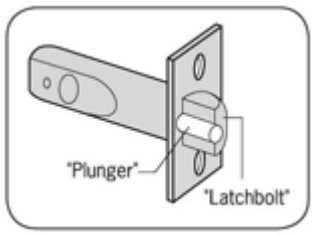

surface of the frame with one screw only. Close the door and ensure that the latch bolt enters the aperture easily, and is held without too much play. When satisfied, draw around the final position of the strike plate, remove it and cut a 1mm rebate to enable it to fit flush. Re-fix the strike plate with both screws.

Code Change Instructions

1. Take your ASEC DIGI lock off the door by unscrewing the 2 bolts in the backplate.

2. Press the C button to reset the chamber and place the lock case on a flat surface with the buttons down.

3. Remove the 2 red screws and carefully lift off the code chamber plate. Check that all 14 springs are held in place on the plate.

4. Note that the red tipped code tumblers correspond in position to the existing code. The blue tipped non-code tumblers fill the other positions. The C tumbler is not coloured.

5. Hold the lock in your hand and depress the C button. Keeping the C button depressed use tweezers to re-position the tumblers to correspond with your new code. The square notches of ALL tumblers MUST face outwards, with the coloured tips ON TOP: see diagram below. Do not force the tumblers in.

N.B. Holding the C button depressed whilst removing or replacing the tumblers is essential to avoid damaging the internal mechanism. Do not attempt to reposition the C tumbler.

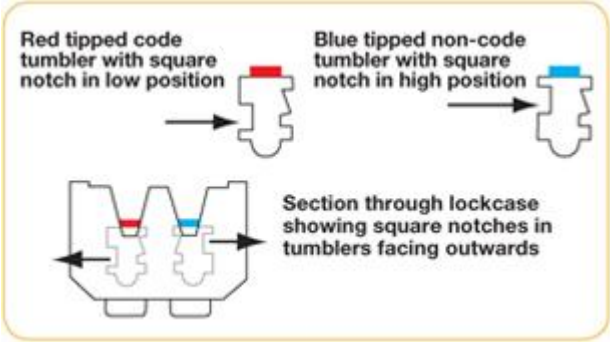

6. Replace the code chamber plate carefully with the 2 red screws.

7. Check the operation of the new code, and make a written note of it before re-installing the lock.

8. Insert the spindle, with the spring on the code side. On latchbolt locks, the spindle must engage the latch as diagram below.

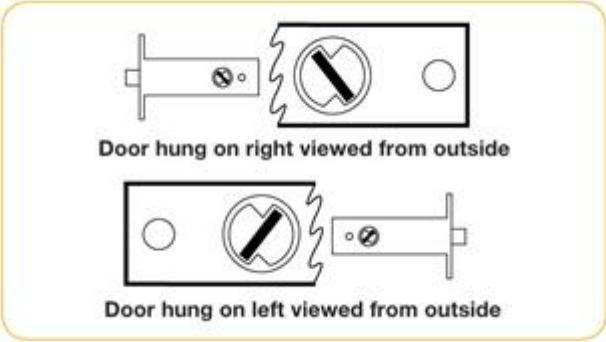

Maintenance

No maintenance of the working parts is necessary. Do not oil. To maintain the finish the lock should be cleaned regularly with a soft cloth. A silicone spray or similar should be used to provide a protective film against grit and grime.

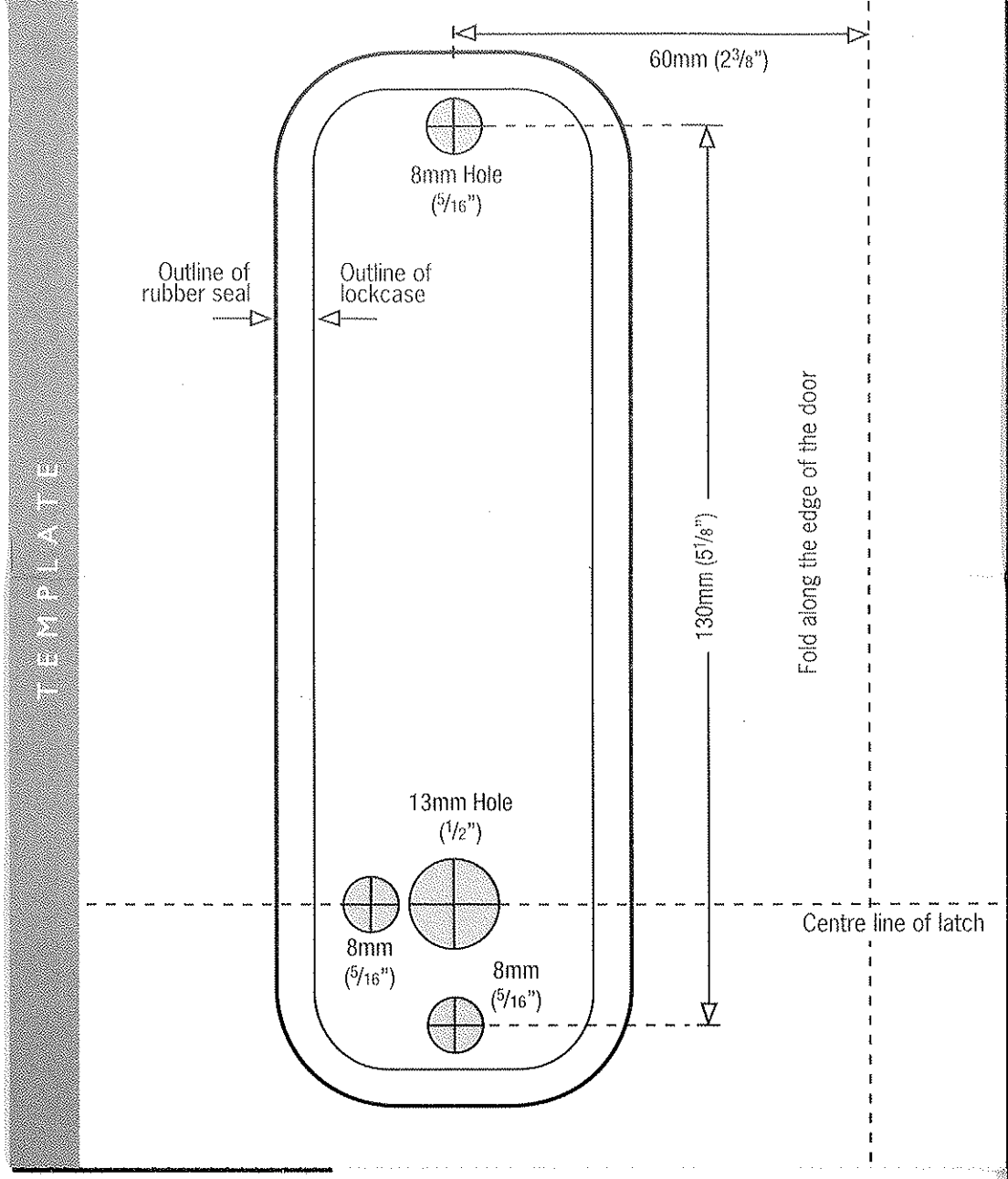
TEMPLATE
60mm (2 3/8")
8mm Hole
(5/16")
Outline of
rubber seal
Outline of
lockcase
130mm (5 1/8")
Fold along the edge of the door
13mm Hole
(1/2")
8mm
(5/16")
8mm
(5/16")
Centre line of latch