①

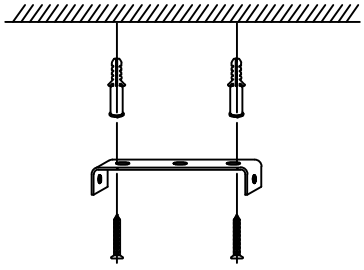

②

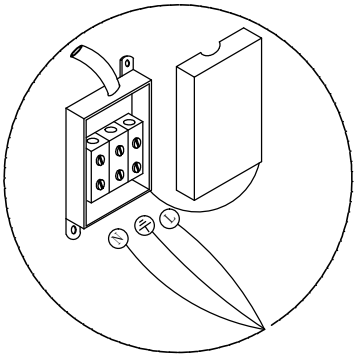

③

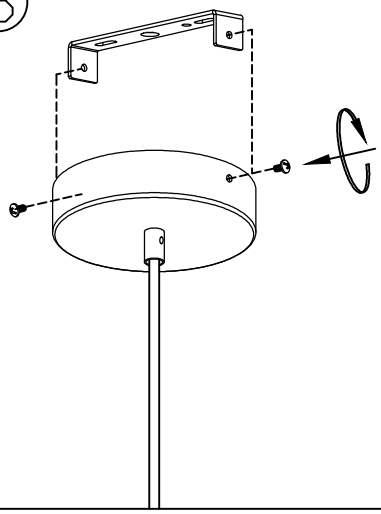

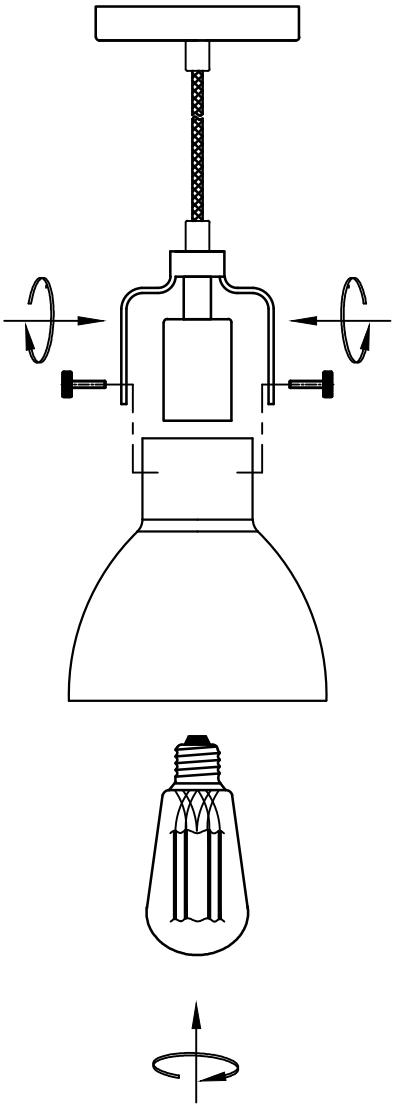

MD18027549-1CSN

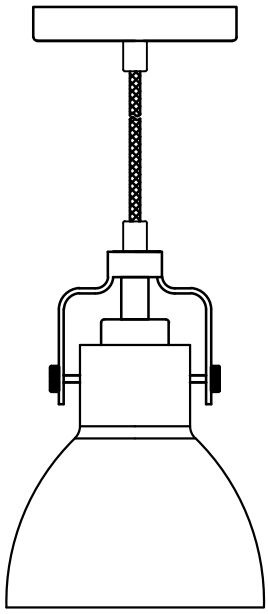

1. This light fitting operates at a normal supply voltage of 220-240V.
2. When changing the bulb or fuses, always switch off at the mains and allow the old bulb to cool down before handling.