GB

Microwave Oven

INSTRUCTION MANUAL
MODEL:MIC 20GD FX

Read these instructions carefully before using your microwave oven,and keep it carefully.
If you follow the instructions, your oven will provide you with many years of good service.

SAVE THESE INSTRUCTIONS CAREFULLY

PRECAUTIONS TO AVOID POSSIBLE EXPOSURE TO EXCESSIVE MICROWAVE ENERGY

(a) Do not attempt to operate this oven with the door open since this can result in harmful exposure to microwave energy. It is important not to break or tamper with the safety interlocks.

(b) Do not place any object between the oven front face and the door or allow soil or cleaner residue to accumulate on sealing surfaces.

(c) WARNING: If the door or door seals are damaged, the oven must not be operated until it has been repaired by a competent person.

ADDENDUM

If the apparatus is not maintained in a good state of cleanliness, its surface could be degraded and affect the lifespan of the apparatus and lead to a dangerous situation.

Specifications

Model:	MIC 20GD FX
Rated Voltage:	230V~50Hz
Rated Input Power(Microwave):	1250W
Rated Output Power(Microwave):	800W
Rated Input Power(Grill):	1000W
Oven Capacity:	20L
Turntable Diameter:	∅245mm
External Dimensions:	594x316x388mm
Net Weight:	Approx. 14 kg

IMPORTANT SAFETY INSTRUCTIONS

WARNING

To reduce the risk of fire, electric shock, injury to persons or exposure to excessive microwave oven energy when using your appliance, follow basic precautions, including the following:

1. Warning: Liquids and other foods must not be heated in sealed containers since they are liable to explode.
2. Warning: It is hazardous for anyone other than a competent person to remove a cover which gives protection against exposure to microwave energy.
3. Warning: Only allow children to use the oven without supervision when adequate instructions have been given so that the child is able to use the oven in a safe way and understand the hazards of improper use.
4. Warning: When the appliance is operated in the combination mode, children should only use the oven under adult supervision due to the temperatures generated. (only for grill series)
5. Only use utensils suitable for use in microwave ovens.
6. The oven should be cleaned regularly and any food deposits should be removed.
7. Read and follow the specific:"PRECAUTIONS TO AVOID POSSIBLE EXPOSURE TO EXCESSIVE MICROWAVE ENERGY".
8. When heating food in plastic or paper containers, keep an eye on the oven due to the possibility of ignition.
9. If smoke is observed, switch off or unplug the appliance and keep the door closed in order to stifle any flames.
10. Do not overcook food.
11. Do not use the oven cavity for storage purposes. Do not store items, such as bread, cookies, etc. inside the oven.
12. Remove wire twist-ties and metal handles from paper or plastic containers/bags before placing them in the oven.
13. Install or locate this oven only in accordance with the installation instructions provided.
14. Eggs in the shell and whole hard-boiled eggs should not be heated in microwave ovens since they may explode, even after microwave heating has ended.
15. Use this appliance only for its intended uses as described in manual. Do not use corrosive chemicals or vapors in this appliance. This oven is especially designed to heat. It is not designed for industrial or laboratory use.
16. If the supply cord is damaged, it must be replaced by the manufacturer, its service agent or similarly qualified persons in order to avoid a hazard.
17. Do not store or use this appliance outdoors.
18. Do not use this oven near water, in a wet basement or near a swimming pool.
19. The temperature of accessible surfaces may be high when the appliance is operating. Keep cord away from heated surface, and do not cover any vents on the oven.
20. Do not let cord hang over edge of table or counter.
21. Failure to maintain the oven in a clean condition could lead to deterioration of the surface that could adversely affect the life of the appliance and possibly result in a hazardous situation.
22. The contents of feeding bottles and baby food jars shall be stirred or shaken and the temperature checked before consumption, in order to avoid burns.
23. Microwave heating of beverages can result in delayed eruptive boiling, therefore take care when handling the container.
24. Steam cleaner is not to be used.
25. During use the appliance becomes hot. Care should be taken to avoid touching heating elements inside the oven.
26. Accessible parts may become hot during use. Young children should be kept away.
27. Do not use harsh abrasive cleaners or sharp metal scrapers to clean the oven door glass since they can scratch the surface, which may result in shattering.

28.The appliance is not intended for use by persons (including children) with reduced physical , sensory or mental capabilities, or lack of experience and knowledge, unless they have been given supervision or instruction concerning use of the appliance by a person responsible for their safety.
29.Children should be supervised to ensure that they do not play with the appliance.
30.The appliances are not intended to be operated by means of an external timer or separate remote-control system.
31. WARNING: Ensure that the appliance is switched off before replacing the lamp to avoid the possibility of electric shock.
32. Only use the temperature probe recommended for this oven.(for ovens provided with a facility to use a temperature-sensing probe.)
33 The door or the outer surface may get hot when the appliance is operating.

To Reduce the Risk of Injury to Persons

Grounding Installation

DANGER

Electric Shock Hazard
Touching some of the internal components can cause serious personal injury or death. Do not disassemble this appliance.

WARNING

Electric Shock Hazard
Improper use of the grounding can result in electric shock. Do not plug into an outlet until appliance is properly installed and grounded.

CLEANING

Be sure to unplug the appliance from the power supply.

1. Clean the inside of the oven after using with a slightly damp cloth.
2. Clean the accessories in the usual way in soapy water.
3. The door frame and seal and neighbouring parts must be cleaned carefully with a damp cloth when they are dirty.

Two-round-pin plug

This appliance must be grounded. In the event of an electrical short circuit, grounding reduces the risk of electric shock by providing an escape wire for the electric current. This appliance is equipped with a cord having a grounding wire with a grounding plug. The plug must be plugged into an outlet that is properly installed and grounded.

Consult a qualified electrician or serviceman if the grounding instructions are not completely understood or if doubt exists as to whether the appliance is properly grounded. If it is necessary to use an extension cord , use only a 3-wire extension cord.

1. A short power-supply cord is provided to reduce the risks resulting from becoming entangled in or tripping over a longer cord.
2. If a long cord set or extension cord is used:
   1)The marked electrical rating of the cord set or extension cord should be at least as great as the electrical rating of the appliance.
   2)The extension cord must be a grounding-type 3-wire cord.
   3)The long cord should be arranged so that it will not drape over the counter top or tabletop where it can be pulled on by children or tripped over unintentionally.

UTENSILS

CAUTION

Personal Injury Hazard

It is hazardous for anyone other than a compentent person to carry out any service or repair operation that involves the removal of a cover which gives protection against exposure to microwave energy.

See the instructions on "Materials you can use in microwave oven or to be avoided in microwave oven." There may be certain non-metallic utensils that are not safe to use for microwaving. If in doubt, you can test the utensil in question following the procedure below.

Utensil Test:

1. Fill a microwave-safe container with 1 cup of cold water (250ml) along with the utensil in question.
2. Cook on maximum power for 1 minute.
3. Carefully feel the utensil. If the empty utensil is warm, do not use it for microwave cooking.
4. Do not exceed 1 minute cooking time.

Materials you can use in microwave oven

Utensils	Remarks
Aluminum foil	Shielding only. Small smooth pieces can be used to cover thin parts of meat or poultry to prevent overcooking. Arcing can occur if foil is too close to oven walls. The foil should be at least 1 inch (2.5cm) away from oven walls.
Browning dish	Follow manufacturer’s instructions. The bottom of browning dish must be at least 3/16 inch (5mm) above the turntable. Incorrect usage may cause the turntable to break.
Dinnerware	Microwave-safe only. Follow manufacturer's instructions. Do not use cracked or chipped dishes.
Glass jars	Always remove lid. Use only to heat food until just warm. Most glass jars are not heat resistant and may break.
Glassware	Heat-resistant oven glassware only. Make sure there is no metallic trim. Do not use cracked or chipped dishes.
Oven cooking bags	Follow manufacturer’s instructions. Do not close with metal tie. Make slits to allow steam to escape.
Paper plates and cups	Use for short–term cooking/warming only. Do not leave oven unattended while cooking.
Paper towels	Use to cover food for reheating and absorbing fat. Use with supervision for a short-term cooking only.
Parchment paper	Use as a cover to prevent splattering or a wrap for steaming.
Plastic	Microwave-safe only. Follow the manufacturer’s instructions. Should be labeled "Microwave Safe". Some plastic containers soften, as the food inside gets hot. "Boiling bags" and tightly closed plastic bags should be slit, pierced or vented as directed by package.
Plastic wrap	Microwave-safe only. Use to cover food during cooking to retain moisture. Do not allow plastic wrap to touch food.
Thermometers	Microwave-safe only (meat and candy thermometers).
Wax paper	Use as a cover to prevent splattering and retain moisture.

Materials to be avoided in microwave oven

Utensils	Remarks
Aluminum tray	May cause arcing. Transfer food into microwave-safe dish.
Food carton with metal handle	May cause arcing. Transfer food into microwave-safe dish.
Metal or metal-trimmed utensils	Metal shields the food from microwave energy. Metal trim may cause arcing.
Metal twist ties	May cause arcing and could cause a fire in the oven.
Paper bags	May cause a fire in the oven.
Plastic foam	Plastic foam may melt or contaminate the liquid inside when exposed to high temperature.
Wood	Wood will dry out when used in the microwave oven and may split or crack.

SETTING UP YOUR OVEN

Names of Oven Parts and Accessories

Remove the oven and all materials from the carton and oven cavity.
Your oven comes with the following accessories:

Glass tray	1
Turntable ring assembly	1
Instruction Manual	1

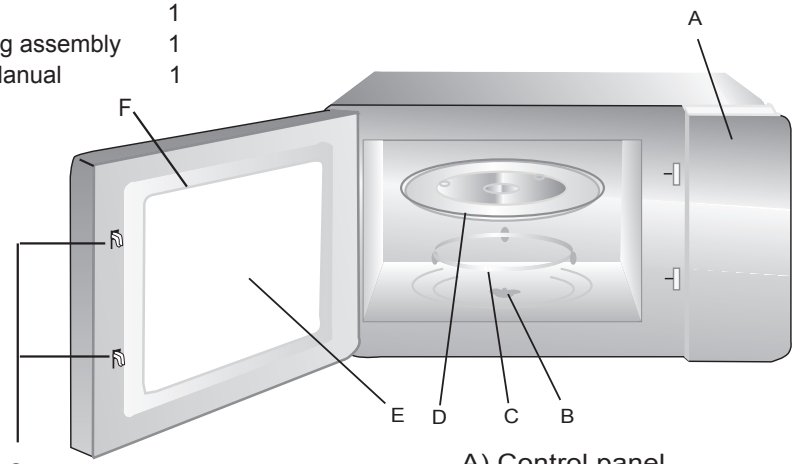

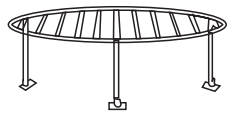

Grill Rack(Only for Grill series)

A) Control panel
B) Turntable shaft
C) Turntable ring assembly
D) Glass tray
E) Observation window
F) Door assembly
G) Safety interlock system

Turntable Installation

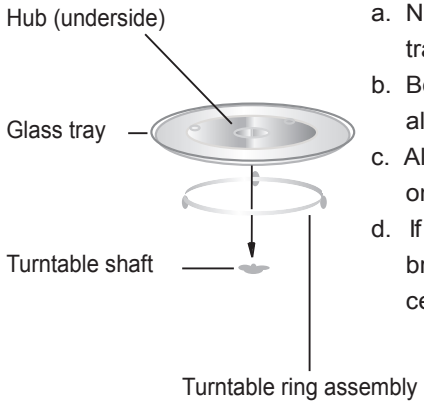

a. Never place the glass tray upside down. The glass tray should never be restricted.
b. Both glass tray and turntable ring assembly must always be used during cooking.
c. All food and containers of food are always placed on the glass tray for cooking.
d. If glass tray or turntable ring assembly cracks or breaks, contact your nearest authorized service center.

Installation and connection

1.This appliance is only intended for domestic use.
2.This oven is intended for built-in use only.It is not intended for counter-top use or for use inside a cupboard.
3. Please observe the special installation instructions.
4.The appliance can be installed in a 60cm wide wall-mounted cupboard(at lease 55cm deep and 85cm off the floor).
5.The appliance is fitted with a plug and must only be connected to a properly installed earthed socket.
6.The mains voltage must correspond to the voltage specified on the rating plate.
7.The socket must be installed and connecting cable must only be replaced by a qualified electrician.If the plug is no longer to accessible following installation,an all-pole disconnecting device must be present on the installation side with a contact gap of at lease 3mm.
8.Adapters,multi-way strips and extension leads must not be used. Overloading can result in a risk of fire.

The accessible surface may be hot during operation.

Operation Instructions

1. Clock Setting

When the microwave oven is electrified, the LED will display "0:00", buzzer will ring once.

1) Press " Clock/ Pre-Set ", the hour figures will flash.

2) Turn " " to adjust the hour figures, the input time should be within 0--23.

3) Press " Clock/ Pre-Set ", the minute figures will flash.

4) Turn " " to adjust the minute figures, the input time should be within 0--59.

5) Press " Clock/ Pre-Set " to finish clock setting. ":" will flash, and the time will light.

Note: 1) If the clock is not set, it would not function when powered.
2) During the process of clock setting, if you press " Stop/Clear ", the oven will go back to the previous status automatically.

2. Microwave Cooking

Press " Microwave/Grill/Combi. ", the LED will display "P100. Press " Microwave/Grill/Combi. " for times or turn " " to choose the power you want, and "P100", "P80" "P50", "P30" or "P10" will display for each added press. Then press" Start/+30Sec./Confirm " to confirm, and turn " " to set cooking time from 0:05to 95:00. Press " Start/+30Sec./Confirm " again to start cooking.

Example: If you want to use 80% microwave power to cook for 20 minutes, you can operate the oven as the following steps.

1) Press " Microwave/Grill/Combi. " once, the screen display "P100".

2) Press " Microwave/Grill/Combi. " once again or turn" " to choose 80% microwave power.

3) Press " Start/+30Sec./Confirm " to confirm, and the screen displays "P 80".

4) Turn " " to adjust the cooking time until the oven displays "20:00".

5) Press " Start/+30Sec./Confirm " to start cooking .

Note: the step quantities for the adjustment time of the coding switch are as follow:

0---1	min	:	5 seconds
1---5	min	:	10 seconds
5---10	min	:	30 seconds
10---30	min	:	1 minute
30---95	min	:	5 minutes

"Microwave/Grill/Combi." Pad instructions

Order	Display	Microwave Power	Grill Power
1	P100	100%	
2	P80	80%	
3	P50	50%	
4	P30	30%	
5	P10	10%	
6	G	0%	100%
7	C-1	55%	45%
8	C-2	36%	64%

3. Grill or Combi. Cooking

Press " Microwave/Grill/Combi. " once,"P100" displays and then press " Microwave/Grill/Combi. " for times or turn the " " to choose the power you want, and "G","C-1" or "C-2" will display for each added press. Then press " Start/+30Sec./Confirm "to confirm, and turn " " to set cooking time from 0:05 to 95:00. Press " Start/+30Sec./Confirm " again to start cooking.

Example: If you want to use 55% microwave power and 45% grill power(C-1) to cook for 10 minutes, you can operate the oven as the following steps.

1) Press " Microwave/Grill/Combi. " once, the screen display "P100".

2) Press " Microwave/Grill/Combi. " times or turn " " to choose combi. 1 mode.

3) Press " Start/+30Sec./Confirm " to confirm, and the screen displays "C-1".

4) Turn " " to adjust the cooking time until the oven displays "10:00".

5) Press " Start/+30Sec./Confirm " to start cooking .

Note:If half the grill time passes, the oven sounds twice, and this is normal.
In order to have a better effect of grilling food, you should turn the food over, close the door, and then if no operation the oven will continue cooking.

4. Quick Start

1) In waiting state, Press " Start/+30Sec./Confirm" to start cooking with 100% power, each added press will increase 30 seconds cooking time up to 95 minutes.
2) In microwave, grill, combi. cooking or time defrost state, each press of " Start/+30Sec./Confirm " can increase 30 seconds of cooking time.
3) In waiting state, turn " " anti-clockwise to set cooking time with 100% microwave power, then press " Start/+30Sec./Confirm " to start cooking.

5. Defrost By Weight

1) Press " Weight/Time Defrost " once, and the oven will display "dEF1".

2) Turn " " to select the weight of food from 100 to 2000 g.

3) Press " Start/+30Sec./Confirm " to start defrosting.

6. Defrost By Time

1) Press " Weight/Time Defrost " twice, and the oven will display "dEF2".

2) Turn " " to select the defrost time.

3) Press " Start/+30Sec./Confirm " to start defrosting.

7. Auto Menu

1) Turn " " right to choose the menu, and "A-1" to "A-8" will display, which means pizza, potato, meat, vegetable, fish, pasta, soup and porridge.

2) Press " Start/+30Sec./Confirm " to confirm.

3) Turn " " to choose the default weight as the menu chart.

4) Press " Start/+30Sec./Confirm " to start cooking.

Example: If you want to use "Auto Menu" to cook fish for 350g.

1) Turn " " clockwise till "A-5" display.

2) Press " Start/+30Sec./Confirm " to confirm.

3) Turn " " to select the weight of fish till "350" display.

4) Press " Start/+30Sec./Confirm " to start cooking.

The menu chart:

Menu	Weight	Display
A-1 Pizza	200 g	200 g
	400 g	400 g
A-2 Potato	200 g	200 g
	400 g	400 g
	600 g	600 g
A-3 Meat	250 g	250 g
	350 g	350 g
	450 g	450 g
A-4 Fish	250 g	250 g
	350 g	350 g
	450 g	450 g
A-5 Vegetable	200 g	200 g
	300 g	300 g
	400 g	400 g
A-6 Beverage	1cup(120ml)	1
	2cup(240ml)	2
	3cup(360ml)	3
A-7 Pasta	50g(with 450ml cold water)	50g
	100g(with 800ml cold water)	100g
A-8 Popcorn	50g	50g
	100g	100g
A-9 Chicken	200g	200g
	400g	400g
	600g	600g
	800g	800g
A-10 Reheat	200g	200g
	400g	400g
	600g	600g

8. Program set in Advance

1) Set the clock first. (Consult the instruction of clock setting.)

2) Input the cooking program. Two stages can be set at most.
Defrost should not be set as the cooking program.

Example: If you want to cook with 80% microwave power for 7 minutes, operate it as the following:

a. Press " Microwave/Grill/Combi. " once, the screen display "P100".

b. Press " Microwave/Grill/Combi. " once again or turn " " to choose 80% microwave power.

c. Press " Start/+30Sec./Confirm " to confirm, and the screen displays "P 80".

d. Turn " " to adjust the cooking time till the oven displays "7:00".

After the aboved steps, be careful not to press " Start/+30Sec./Confirm " to start cooking.

3) Press " Clock/ Pre-Set ", the hour figures will flash.

4) Turn " " to adjust the hour figures, the input time should be within 0--23.

5) Press " Clock/ Pre-Set ", the minute figures will flash.

6) Turn " " to adjust the minute figures, the input time should be within 0--59.

7) Press " Start/+30Sec./Confirm " to finish setting. If the door is closed, buzzer will ring twice when the time arrives, then cooking will start automatically.

9. Multi-section cooking

At most 2 sections can be set for cooking. In multi-section cooking, if one section is defrosting, then defrosting shall be placed in the first section.

Example: If you want to defrost food for 5 minutes and then cook with 80% microwave power for 7 minutes, operate it as the following:

1) Press " Weight/Time Defrost " twice, and the oven will display "dEF2".

2) Turn " " to select the defrost time till "5:00" display.

3) Press " Microwave/Grill/Combi. " once, the screen display "P100".

4) Press " Microwave/Grill/Combi. " once again or turn " " to choose 80% microwave power.

5) Press " Start/+30Sec./Confirm " to confirm, and the screen displays "P 80".

6) Turn " " to adjust the cooking time till the oven displays "7:00".

7) Press " Start/+30Sec./Confirm " to start cooking, and buzzer will sound once for the first section, defrosting time counts down; buzzer will sound once again entering the second cooking. when cooking finish, buzzer sounds five times.

10. Inquiring Function

(1) In states of microwave,grill and combination cooking, press " Microwave/Grill/Combi. ", the current power will be displayed for 3 seconds. After 3 seconds, the oven will turn back to the former state;

(2) In cooking state, press " Clock/ Pre-set " to inquire the time and the time will display for 3 seconds.

(3) In preset state, press " Clock/ Pre-set " to inquire the preset time, and the preset time will display for 3 seconds.

11. Lock-out Function for Children

Lock: In waiting state, press " Stop/Clear " for 3 seconds, there will be a long beep denoting entering the children-lock state and the locked indicator will display if the time has been set, otherwise, the LED will display " [- -] ".

Lock quitting: In locked state, press " Stop/Clear " for 3 seconds, there will be a long "beep" denoting that the lock is released.

Trouble shooting

If something does trouble shooting; before seeking assistanace carry out the following checks first.

Normal	
Microwave oven interfering TV reception	Radio and TV reception may be interfered when microwave oven operating. It is similar to the interference of small electrical appliances, like mixer, vacuum cleaner, and electric fan. It is normal.
Dim oven light	In low power microwave cooking, oven light may become dim. It is normal.
Steam accumulating on door, hot air out of vents	In cooking, steam may come out of food. Most will get out from vents. But some may accumulate on cool place like oven door. It is normal.
Oven started accidentally with no food in.	It is forbidden to run the unit without any food inside. It is very dangerous.

Trouble	Possible Cause	Remedy
Oven can not be started.	(1) Power cord not plugged in tightly.	Unplug. Then plug again after 10 seconds.
	(2) Fuse blowing or circuit breaker works.	Replace fuse or reset circuit breaker (repaired by professional personnel of our company)
	(3) Trouble with outlet.	Test outlet with other electrical appliances.
Oven does not heat.	(4) Door not closed well.	Close door well.
Glass turntable makes noise when microwave oven operates	(5) Dirty roller rest and oven bottom.	Refer to "Maintenance of Microwave" to clean dirty parts.

CUSTOMER ASSISTANCE SERVICE

If you cannot identify the cause of the operating anomaly: switch off the appliance (do not subject it to rought treatment) and contact the Assistance Service.

PRODUCT SERIAL NUMBER. Where can I find it?

It is important that you to inform the Assistance Service of your product code and its serial number (a 16 character code which begins with the number 3); this can be found on the guarantee certificate or on the data plate located on the appliance.

It will help to avoid wasted journerys to technicians, thereby (and most significantly) saving the corresponding callout charges.

This appliance is marked according to the European directive 2002/96/EC on Waste Electrical and Electronic Equipment (WEEE). By ensuring this product is disposed of correctly, you will help prevent potential negative consequences for the environment and human health, which could otherwise be caused by inappropriate waste handling of this product.

The symbol on the product indicates that this product may not be treated as household waste. Instead it shall be handed over to the applicable collection point for the recycling of electrical and electronic equipment

Disposal must be carried out in accordance with local environmental regulations for waste disposal.

For more detailed information about treatment, recovery and recycling of this product, please contact your local city office, your household waste disposal service or the shop where you purchased the product.