Assembly Instructions Plinth Drawer *AXOR*

Please note before start assembly!

The rail adapters must have been
assembled before the base units are mounted!

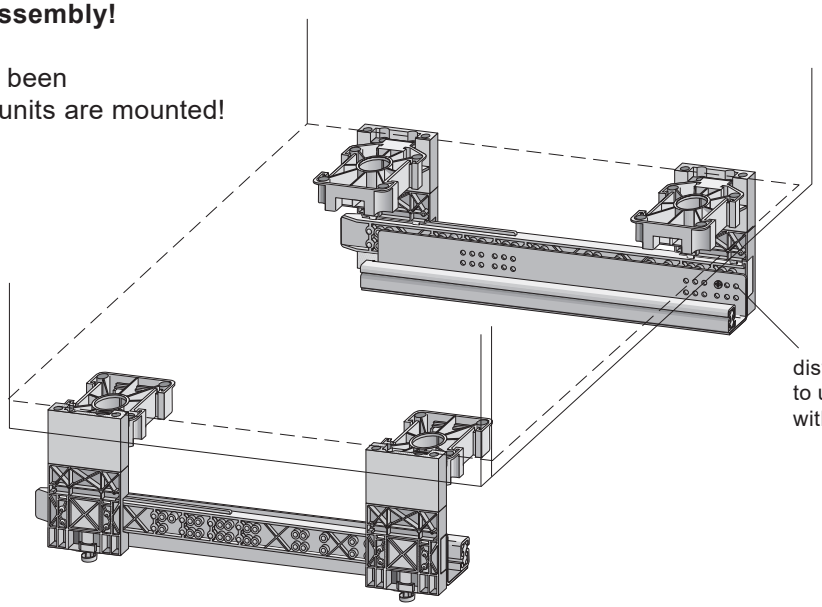

fitting-versions 150 mm for 16 mm sides

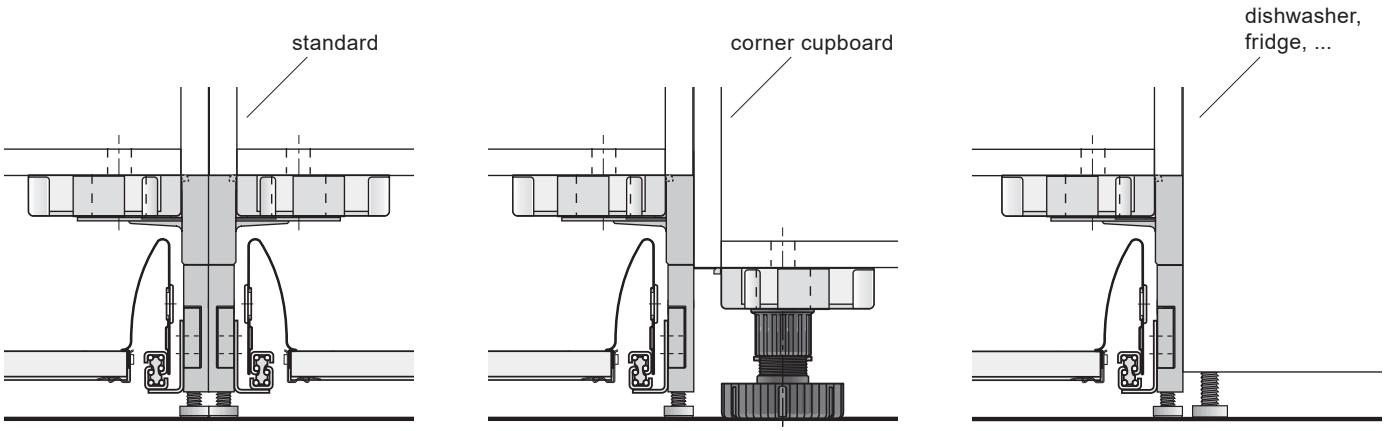
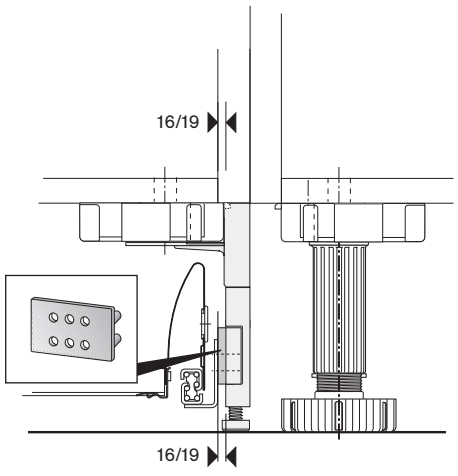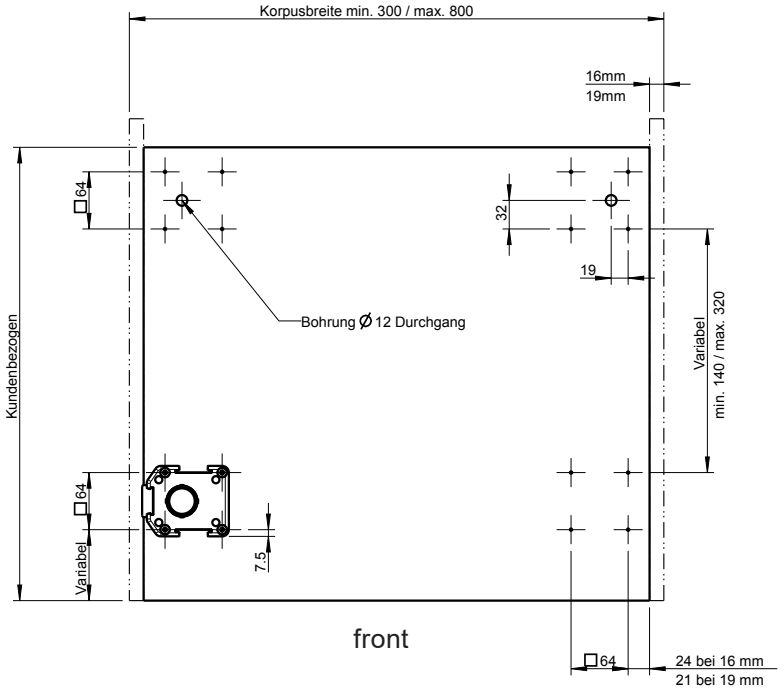
for 18/19 mm sides you have
to use the distance plate