The Push Fit Latch / Privacy Bolt Fitting Instructions

UNION
ASSA ABLOY

Fitting Templates

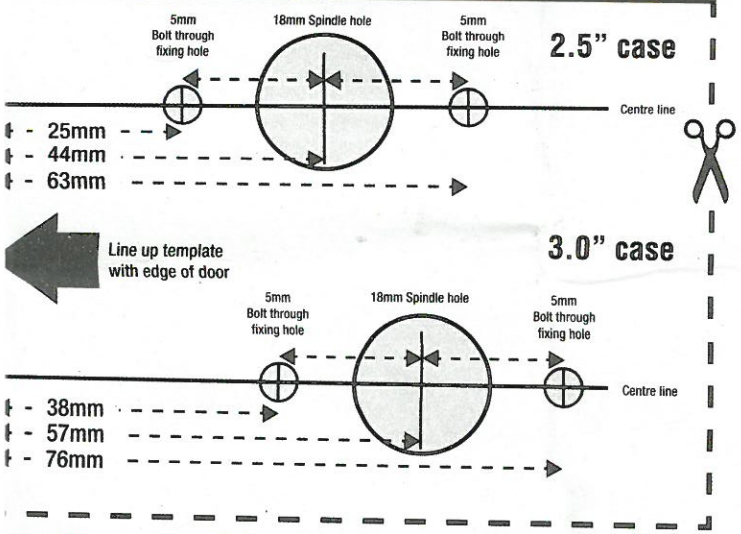

IMPORTANT

Before you drill any holes double check you are using the right template

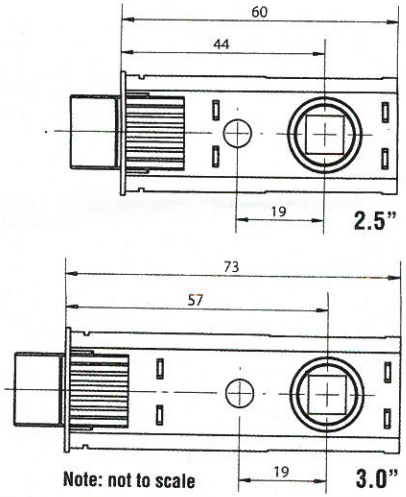

Note: not to scale

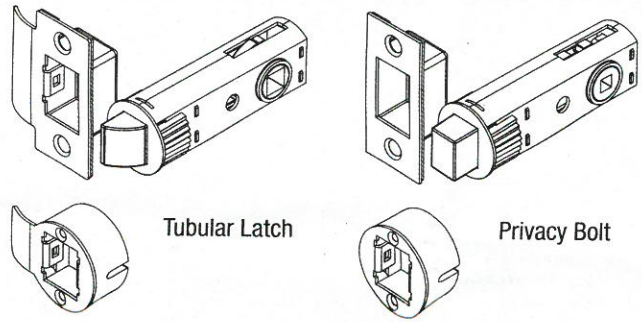

To watch our fitting video scan the QR tag below

TOOL KIT REQUIRED

- Pencil and eraser
- Set square
- Ruler
- 22mm drill bit (square strike)
- 32mm drill bit (round strike)
- 25mm drill bit
- 18mm drill bit
- 5mm drill bit
- 10mm chisel
- Hammer
- Screw driver
- Rubber mallet
- Small wooden block

1 Mark the door and frame

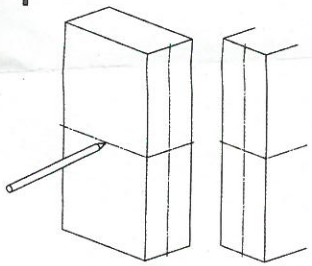

- Mark centreline of door and frame with a pencil.
- At the required height, mark a horizontal line on the door and frame.

TIP! Use a set square

2 Mortice the door

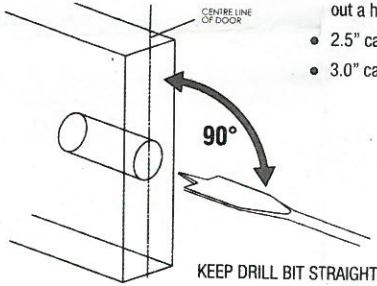

- Using a 25mm drill bit, bore out a hole to the required depth.
- 2.5" case = min 68mm
- 3.0" case = min 78mm

TIP! Mark the drill bit at the required depth

KEEP DRILL BIT STRAIGHT AND AT 90° TO THE DOOR

3 Drill the holes for the door furniture

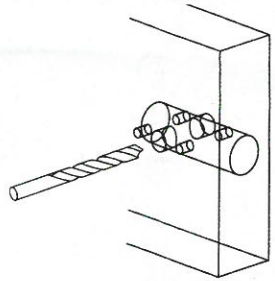

- Using the template. Line up the horizontal line and mark the position for the spindle and bolt through fixings (if required).
- For spindle hole use a 18mm drill bit - drill straight through the door.
- For bolt through fixing holes use a 5mm drill - drill straight through the door.

4 Insert the latch/bolt

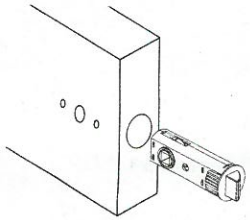

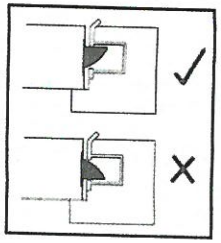

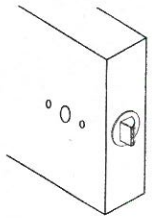

- Insert the latch/bolt and ensure the centreline marked on the doors is in line with the seam line on the product.
- The product is secured with a interference fit so that the head will be held tight in the timber.
- Lightly tap the forend on both sides of the latch / bolt using a small block of wood and rubber mallet.
- **DO NOT HAMMER THE LATCH INTO POSITION.**
- Fit the door furniture and check the operation of the latch/bolt with the door in the open position.

5 Position and fitting of the strike

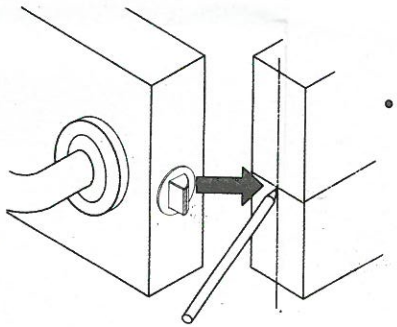

- From the position of the installed latch/bolt ensure that the height line on the frame is still aligned. Make a vertical line half the width of the door (measuring from the door stop).
- Select which strike you prefer - round or square strike. Place your strike over the intersection of the 2 lines.

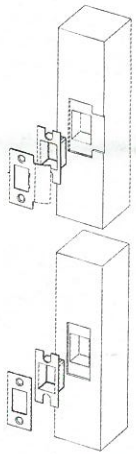

Square

- Draw around the strike and mark out the aperture and fixing holes. Pilot drill the holes to create a datum point.
- At the point of the intersection drill a 22mm dia hole, 16mm deep.
- Chisel out the hole to accept the matching splinter guard 22mm x 30mm.
- From the outline of the strike recess the timber 2mm to accept the strike and the splinter guard so it is flush with the frame.
- Position the splinter guard in the hole, overlay the strike and fix into position.

Round
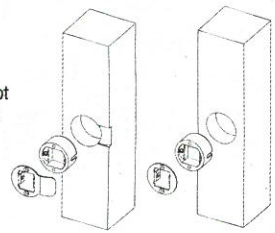
- At the point of the intersection, drill a 32mm dia hole 17mm deep.
- Position the splinter guard in the hole, overlay the strike and fix into position with the screws provided.